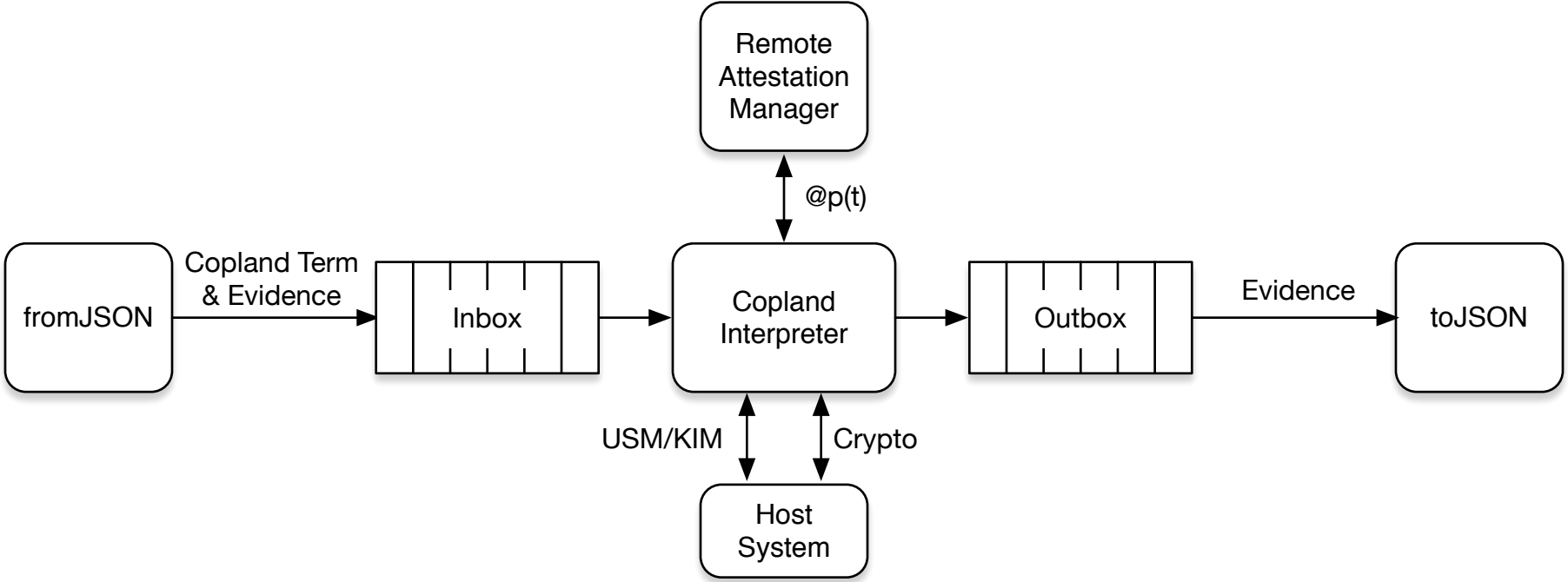
Remote Attestation Manager
@p(t)
fromJSON
Copland Term & Evidence
Inbox
Copland Interpreter
Outbox
Evidence
toJSON
USM/KIM
Crypto
Host System